TECHNOLOGY
ITALIANA

# The CNC Punching Machine specialists

EN

# About **us**

TECHNOLOGY Italiana is a historical company that has been operating in the machine tool sector for over 45 years, becoming an indisputable reference point.

In 1973 “Officine Piccini e Bassich”, already active in the light carpentry sector since 1964, became TECHNOLOGY Italiana. It all started when they were looking for a punching machine but, not being able to find a solution on the market suitable for their production needs, they decided to manufacture the first TECHNOLOGY CNC punching machine themselves. Since then we have constantly dedicated ourselves to the production of punching machines for sheet metal working.

The research and development activity is entirely focused on the design of CNC punching machines and this is why we can define ourselves as absolute specialists in the sector. Our long experience together with the precious collaboration with international partners allow us to offer innovative technology and services, in the name of Made in Italy quality.

TECHNOLOGY Italiana is also a synonym of reliability. We have always strived to meet customers’ needs, offering the widest range of punching machines on the market, becoming real consultants for them.

# Vision & **Mission**

## Our **Vision**

We want to become the benchmark in sheet metal punching technology on a worldwide level. Our company is constantly looking for global, smart and innovative solutions.

## Our **Mission**

We want to give our customers a unique business experience, providing them with the best punching technology. We are not just simple suppliers but real partners who constantly monitor their customers with targeted after-sales services.

# Our **figures**

**These numbers reflect TECHNOLOGY's path of growth and innovation, defining the ambitious road we have taken.**

## 47

**YEARS OF EXPERIENCE**
Since 1973 we have been operating in the machine tool sector as manufacturers of CNC punching machines.

## 1300

**INSTALLED PUNCHING MACHINES**
Over the years we have installed more than 1300 machines worldwide.

## 16

**MODELS OF MACHINES**
The wide choice of machines is a feature that makes TECHNOLOGY stand out on the market.

## 45

**COUNTRIES WHERE WE HAVE OUR MACHINES INSTALLED**
TECHNOLOGY is active at global level in the sale of punching machines

# Why rely on the **punching specialists**

## Expertise and reliability

Our long experience in the field has allowed us to acquire a high knowledge in punching technology. Today we share our expertise with our customers, becoming real consultants for them.

## Research and Development

In order to continue to be the Punching Specialists, every year we invest 5% of our turnover in Research and Development. We can thus offer our customers cutting-edge technology.

## Wide range

We offer a wide range of CNC punching machines that allows to find the ideal solution for both small and large companies.

## Always by your side

We are constantly at the customer's side, offering a global after-sales service, so as to be the only reference point for any need.

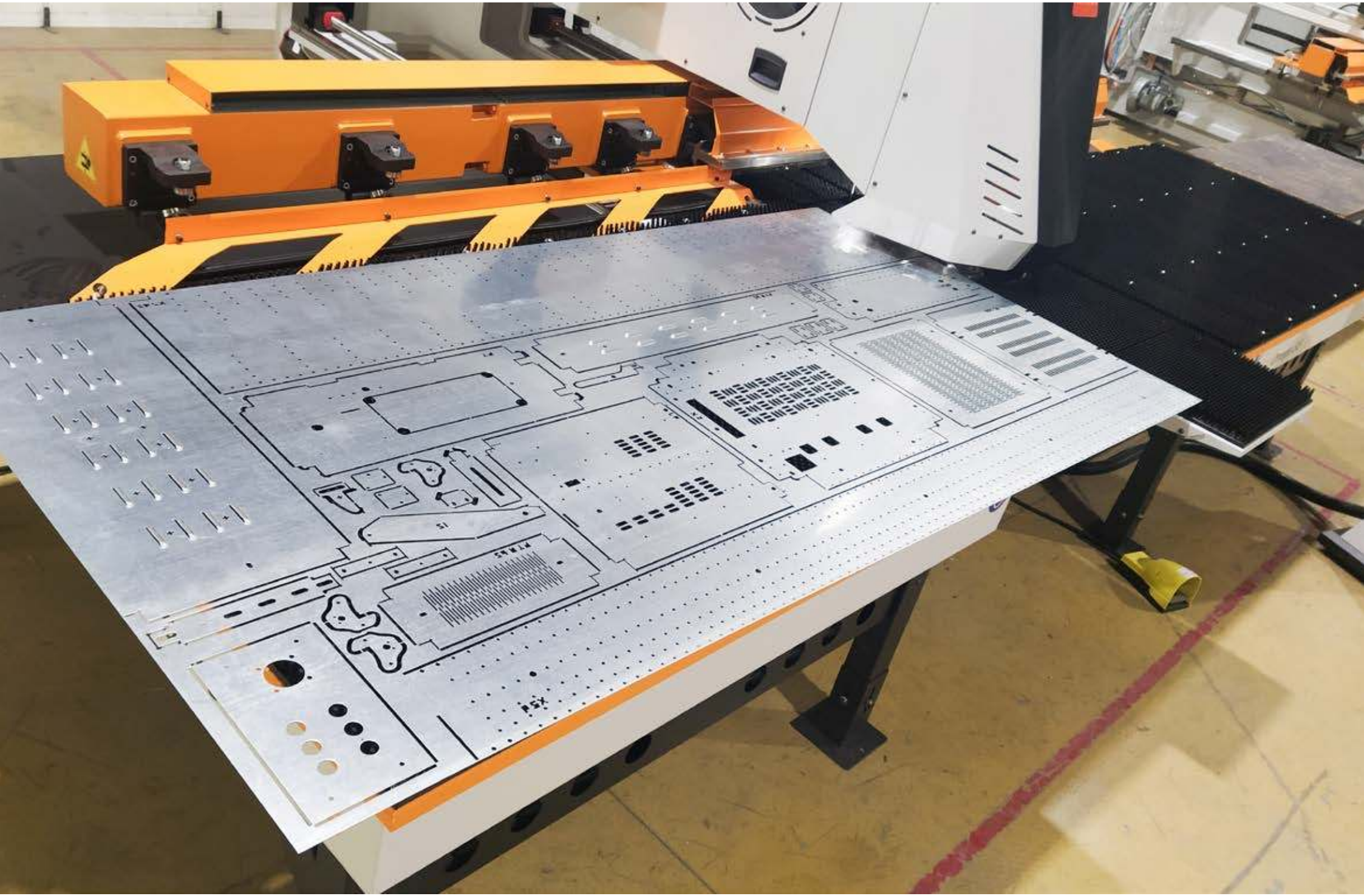

# The art
# **of punching.**

Let yourself be inspired by the many options that the punching machine offers you to cut and deform sheet metal.

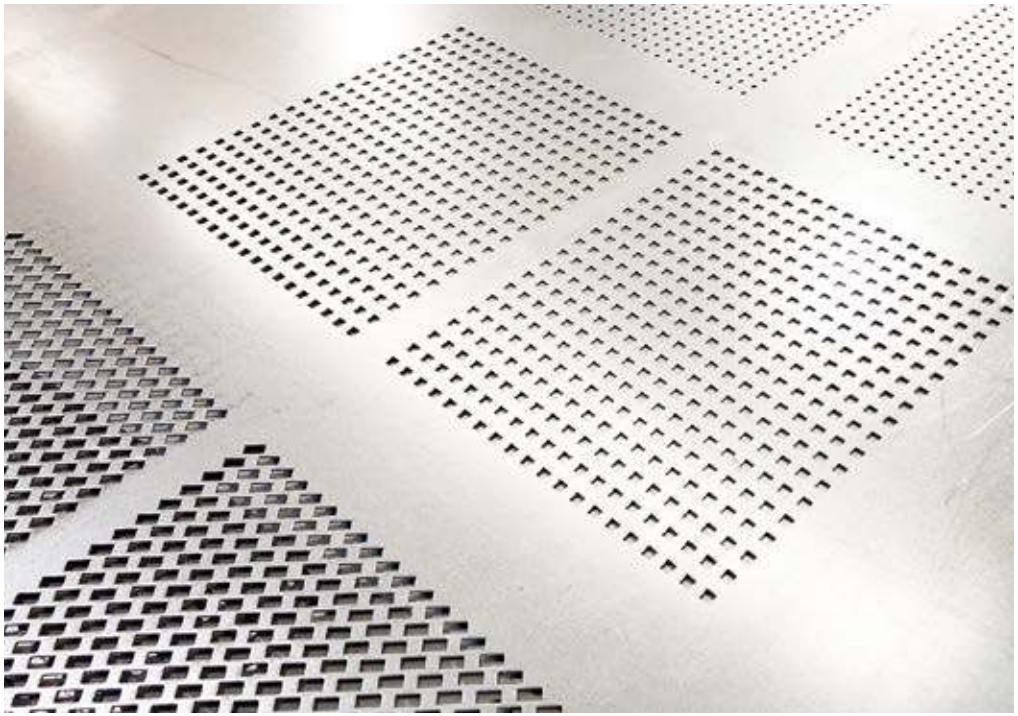

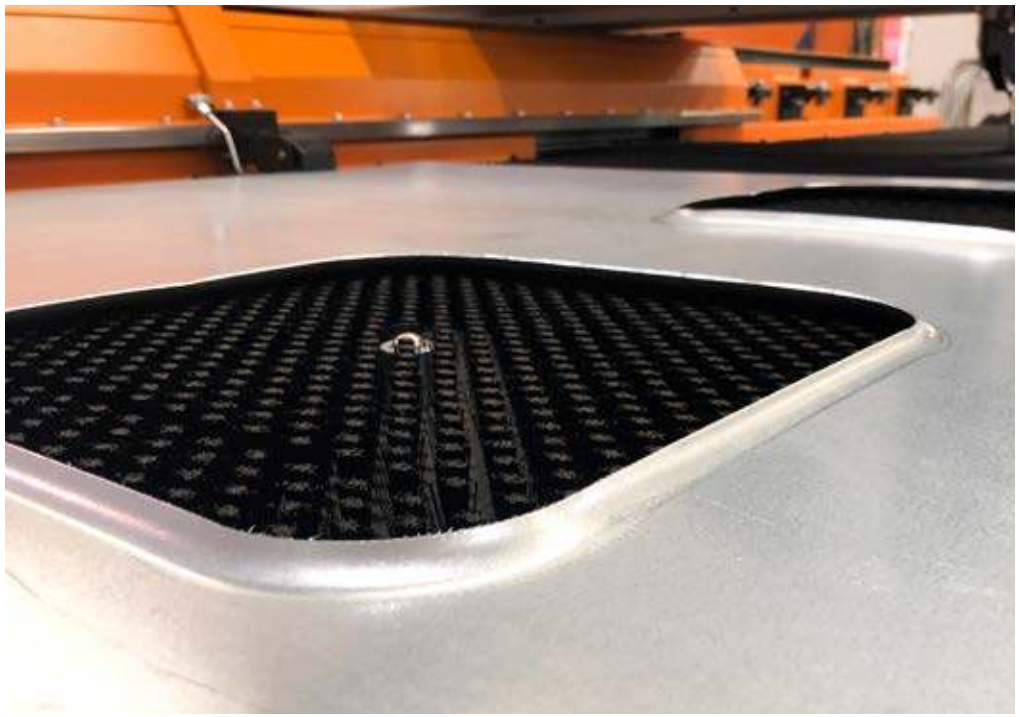

# Processing on sheet metal. **Precision and quality.**

The punching machine is the best solution to perform cutting and/or deformation operations on sheet metal from 1 to 6 mm. All this at low cost, without sacrificing precision and quality.

## Fine contouring

Fine contouring for complex machining operations, ensuring high workpiece quality.

## Forming

Forming with single punch or by step (e.g. louvers)

## Embossing

Embossing operations

## Marking

Marking machining to realize logos, lettering or other forms.

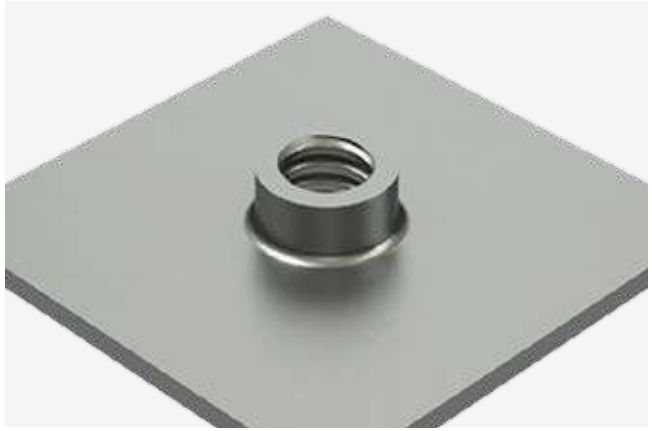

## Tapping

Tapping without chip removal on holes previously realized.

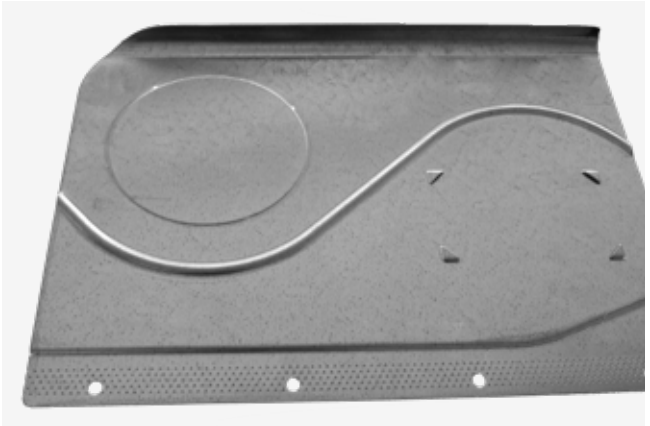

## High speed forming

CNC functions for the realization of Drag and Drop forming (wheel tools by WILSON TOOL)

# **Tool change system**
# The future is here

**Innovation and functionality are the leitmotif of every tool change system on TECHNOLOGY punching machines.**
**Vertical Turret, Smart Turret and Fast Change stand out from all the tool change systems on the market for their unique features never seen before on a punching machine.**

## **Vertical** Turret

(TP Gamma - TP Zeta - TP Zeta XL)

Vertical Turret differs from any other automatic tool change technology due to its strategic position and vertical design.
Worldwide patented, it features auto-index system (tool rotation) for all tools and employs the Speedy Setup system to equip each station in just 12 seconds.
In addition, the tool configuration of the 15 stations of the Vertical Turret can be changed and customized over time according to production needs.

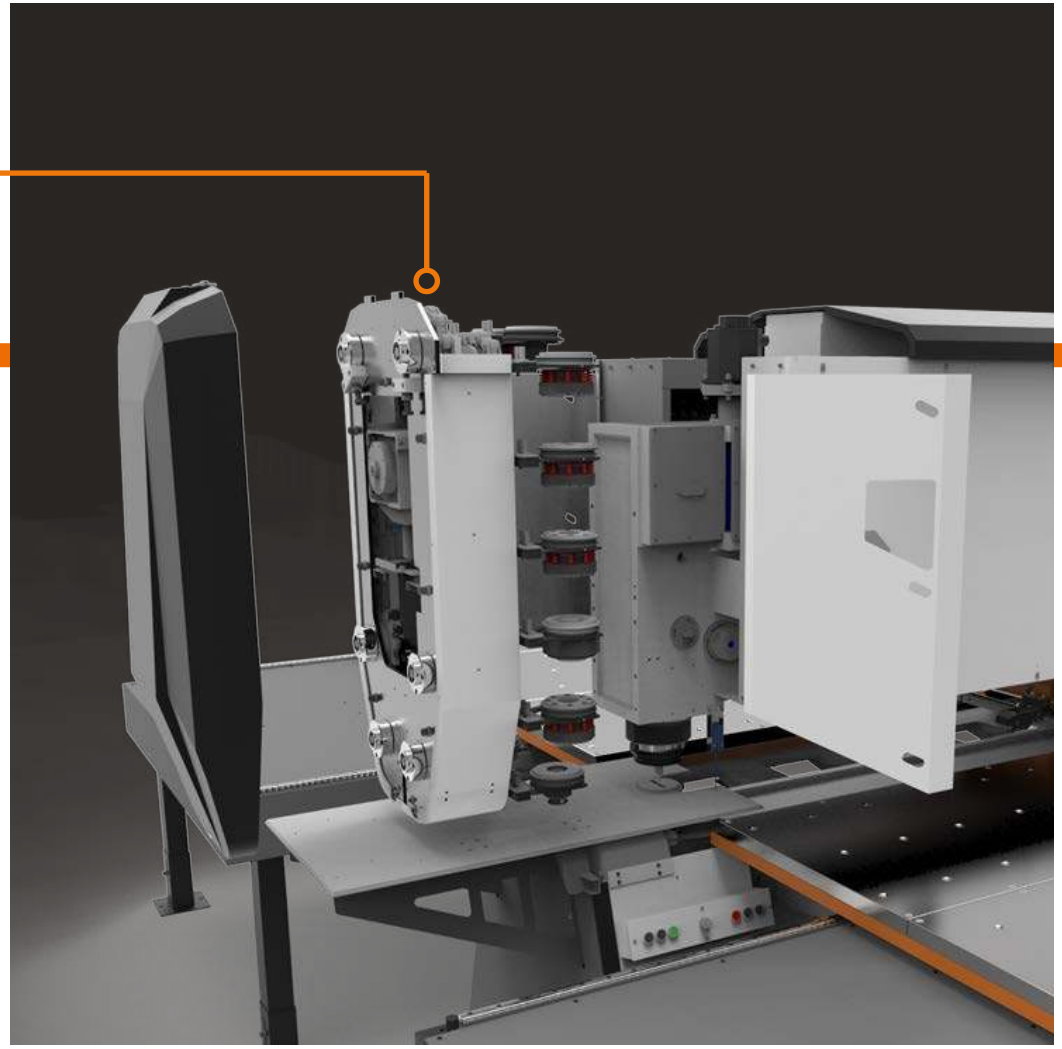

# Why chose the **Vertical Turret**

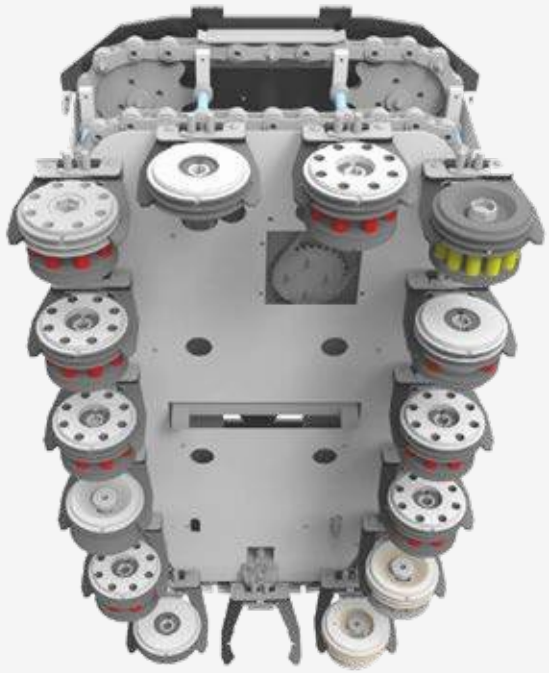

**Innovative vertical turret**

The strategic position of the Vertical Turret enables more complex forming operations to be carried out, thanks to the reduced encumbrance in the work area. Moreover, the operator has a better visibility of the sheet metal being worked.

**Maximum configuration versatility**

The machine configuration can be customized by inserting any kind of tool in every station. The innovative Speedy Setup system allows to equip each station in just 12 seconds.

**All tools are rotating (auto-index)**

By rotating any tool from 0° to 360° the number of tools to be purchased and the machining time is significantly reduced. Sheet metal waste is minimized thanks to the possibility of performing complex nestings.

# **Smart** Turret

(TP Beta)

Smart Turret is an automatic and versatile tool change system, designed in a horizontal position. Its 5 stations are all equipped with the auto-index technology that allows the tool to rotate from 0° to 360°. The Smart Turret provides a customized configuration and exploits the The Speedy Setup system to equip each station in just 12 seconds.

**All tools are rotating (auto-index)**

By rotating any tool from 0° to 360° the number of tools to be purchased and the machining time is significantly reduced. Sheet metal waste is minimized thanks to the possibility of performing complex nestings.

**Maximum configuration versatility**

The machine configuration can be customized by inserting any kind of tool in every station. The innovative Speedy Setup system allows to equip each station in just 12 seconds.

# **Fast**
# Change
(Tecnumerik - TP Alpha)

For a semi-automatic punch press the speed of tool change is a key point. This is why TECHNOLOGY punching machines using manual tool change system (Tecnumerik and Alpha) are equipped with the Fast Change system, which allows to replace the tool on the machine in just 12 seconds.
Fast Change is the fastest and easiest manual tool change system on the market.

# Latest generation **servo drive** technolgy

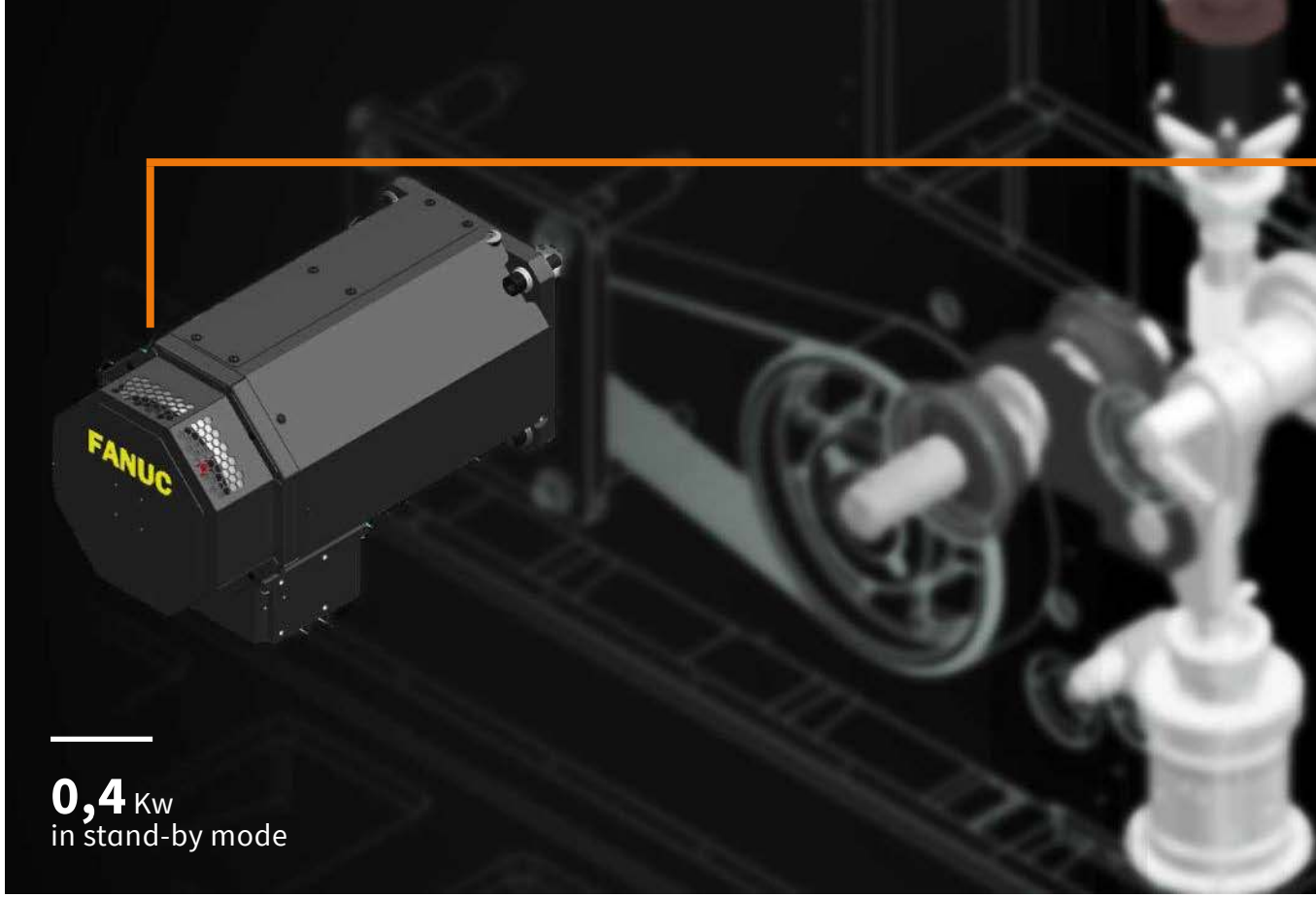


**All TECHNOLOGY punching machines look to the future. The outdated hydraulic punching system has been supplanted by the most efficient servo drive technology, adopted by TECHNOLOGY on the whole line of punching machines.**

The servo drive system designed by TECHNOLOGY combines excellent performance with significant energy savings.
This is a crucial factor in a world that is increasingly moving towards energy efficient solutions.

**Stand-by mode.** During stand-by mode the motors are switched off to reduce power consumption to only 0.4 Kw.

**FANUC motor.** For all electronic components TECHNOLOGY relies on the world leader in this field, namely FANUC.

**Absence of hydraulic oil.** The servoelectric system ensures reduced energy consumption due to the absence of chiller systems required to cool down the unit. Besides, it requires minimal maintenance costs.

**SoftPunch mode.** This function allows to considerably reduce the noise when machining thicker workpieces.

**DualCam.** Innovative technology with which to implement high frequency machining operations avoiding overheating of the motor.

# **Dual**Cam

**Servo electric motor with dual mode. An exclusive feature of TECHNOLOGY punching machines.**

For the first time on a punching machine, high-frequency operations can be carried out without motor overheating, thanks to the innovative DualCAM technology. TECHNOLOGY has thus introduced a **new CONTINUOUS ROTATION mode of the engine**, in addition to the traditional PENDULUM mode, which is common to all punching machines.

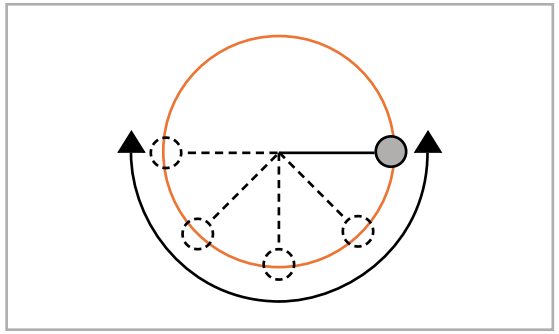

**PENDOLUM** Mode

Useful for single punching operations. It allows to program the punch stroke. It is fast but it causes motor overheating.

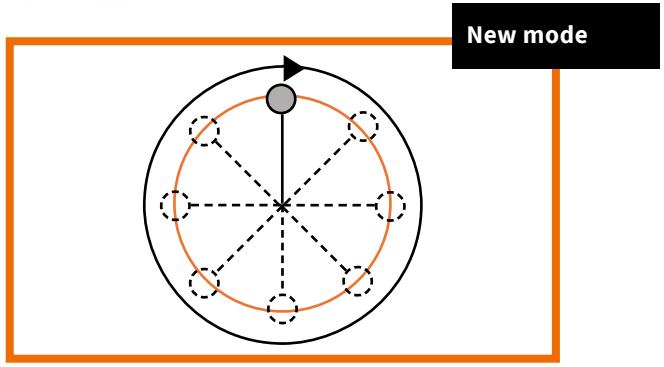


**CONTINUOUS ROTATION** Mode

It reduces the dynamic stress of the motor and is perfect for making deformations, such as nibbling and grids, because there is more space between punch and die.

## **How** does it work?

**PENDOLUM** Mode

The motor performs a movement equivalent to that of a pendulum, making continuous braking and accelerations. In this mode the punching machine is faster but overheating of the motor increases.

**CONTINUOUS ROTATION** Mode

The motor performs complete rotations without any braking nor acceleration. In this mode the punching machine is not subjected to motor overheating.

## Advantages

- Non stop high-frequency machining
- Punching frequency of 900 strokes/min
- Dynamic stress of the servo-electric system almost zero
- Absence of chiller cooling systems
- Reduced noise thanks to the SoftPunch function

# Open
# “C” Frame

**The open "C" frame provides the highest possible accessibility.**
Unlike closed structures, the "C" shaped frame is the only solution to **process sheets that are larger than the machine working area** and is ideal for loading sheets on multiple sides without obstacles.

## Enhanced accessibility

**Ease of access** to the machine and **increased visibility** in the work area are features you cannot miss if you want to increase production efficiency. TECHNOLOGY has always adopted the "C" frame for its punching machines, as its benefits are remarkable.

*Since **1973** we have been designing our punching machines with the "C" frame.*

# Customized **Human Machine Interface (HMI)**

All punching machines are equipped with a console featuring FANUC PC, 15" touch-screen monitor and a simple and intuitive **HMI (Human Machine Interface)** created by TECHNOLOGY specifically for its customers.

The HMI interface provides a simple way to use the machine by exploiting three different modes of operation (manual, semi-automatic, automatic). This feature is useful especially with single-punch semi-automatic punching machines such as Tecnumerik and TP Alpha.

**Three** modes of operation of the punching machine

## 1

### Manual

The punching operations and the movement of the axis are performed manually, using the pedal and the joystick installed on the control panel.

## 2

### Semi-automatic

The movement of the axes is automatic (according to programming) while the punching operation is manual by using the pedal.

## 3

### Automatic

Once the program has been realized with the graphic software TECNOCAM, punching operations and axis movement are automatic.

# Change the rules of the game. **Embrace the Auto-index technology**

The advanced integrated auto-index system allows any tool to be oriented from 0° to 360°, with an accuracy of 0.01°. Thus the number of tools to be purchased is drastically reduced.
In addition, with CAD/CAM software you can automatically perform complex nesting by reducing programming and production time.

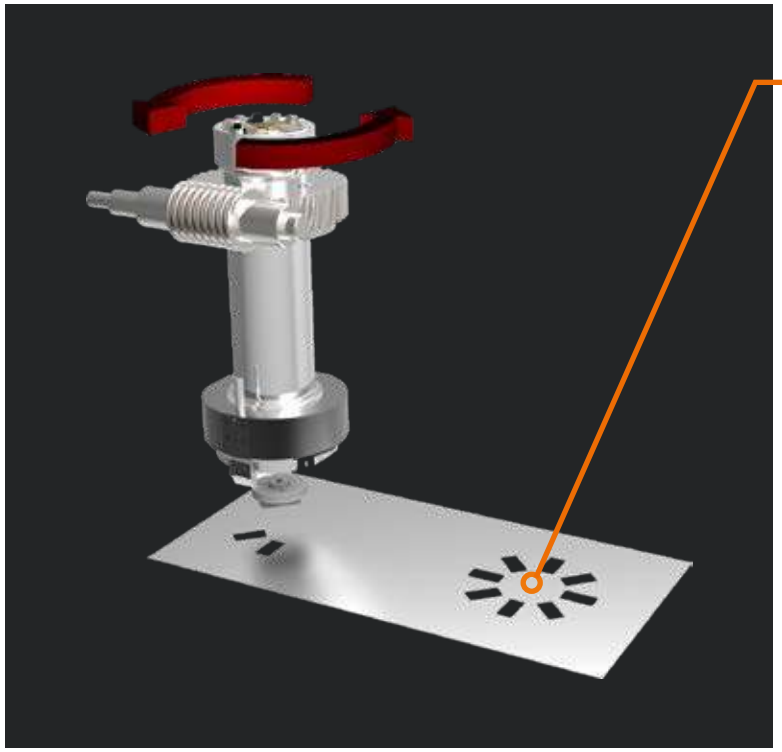

### Auto-Index

The workpiece in the image was created by using a single tool rotated from 0° to 360°.

- Automatic creation of complex nesting using CAD/CAM software
- Fewer tools to buy, since each tool can be rotated by 360°.
- It makes it easier to program the machine
- Reduced production times
- Tool rotation accuracy of 0.01°

## **Save** time and money

The example shows the advantage of having all rotating tools.

**A.** Without auto-index

3 tools

**B.** With auto-index

1 tools

In example **A** (machine with limited number of auto-indexlimited) it is necessary to purchase 3 tools to carry out the three desired shapes.

In the example **B** (machine with all rotating tools - TECHNOLOGY) just one rotating tool is enough to perform the same three operations as case A.
**This leads to considerable savings in terms of time and money.**

# **The smallest and cheapest** punching tools

Our punching machines are equipped with the best tools on the market, namely **TRUMPF-style tools**.
Thanks to their small size, the TRUMPF style tools are much easier to handle and guarantee up to 70% savings.

The latest generation of TECHNOLOGY punching machines maintain full compatibility with TECHNOLOGY style tools.

**63%**

**SMALLER**

THAN TURRET TOOLS

**70%**

**CHEAPER**

THAN TURRET TOOLS

**73%**

**LIGHTER**

THAN TURRET TOOLS

# The **think-ing brain** of punching machines.

**24** Months warranty

**25** Years of spare parts availability

**263** Service branches in 108 countries

## Why we choose FANUC for the electronic components of our punching machines

As for all CNC machines, also for the punching machine, the electronic component is the essential part, but at the same time the most fragile. For this reason, when talking about the CNC, motors and drives of a machine, it is extremely important to rely on specialized partners.

That is why TECHNOLOGY has selected a top level partner such as **FANUC**, a world leader company able to guarantee maximum reliability, quality and availability of components over time.

- Technical assistance around the world
- High quality and long-lasting components
- Warranty extension up to 5 years

# **World-class** partners

Since 1973 TECHNOLOGY has been manufacturing its punching machines choosing only high quality partners and suppliers to obtain excellent quality results

# **Start** Line

The key feature of all Start Line punching machines is the Quality/Price ratio.

## Tecnumerik

**Typology** Semi-Automatic
**Productivity** ★ ☆ ☆ ☆ ☆

## TP Alpha

**Typology** Semi-Automatic
**Productivity** ★ ★ ☆ ☆ ☆

## TP Beta

**Typology** Automatic
**Productivity** ★ ★ ★ ☆ ☆

## TP Gamma

**Typology** Automatic
**Productivity** ★ ★ ★ ★ ☆

# Tecnumerik

Designed to be the small punching machine that is indispensable in every carpenter's workshop. Ideal for making prototypes, small and simple productions and modifications of workpieces already manufactured with an automatic or laser machine.

**Semi-Automatic.** The tool change of the machine is performed manually, while the punching operations can be managed in three modes: manual, semi-automatic and automatic (see page 15).

**25** tons
of punching force

**1**
station

**CAM SOFTWARE AND 15" TOUCH-SCREEN DISPLAY**

The machine programming is made easy and immediate thanks to the integrated graphic software (TecnoCAM) and 15 inch touch-screen monitor.
TecnoCAM is a software that allows to realize simple shapes in a few steps directly on the machine.

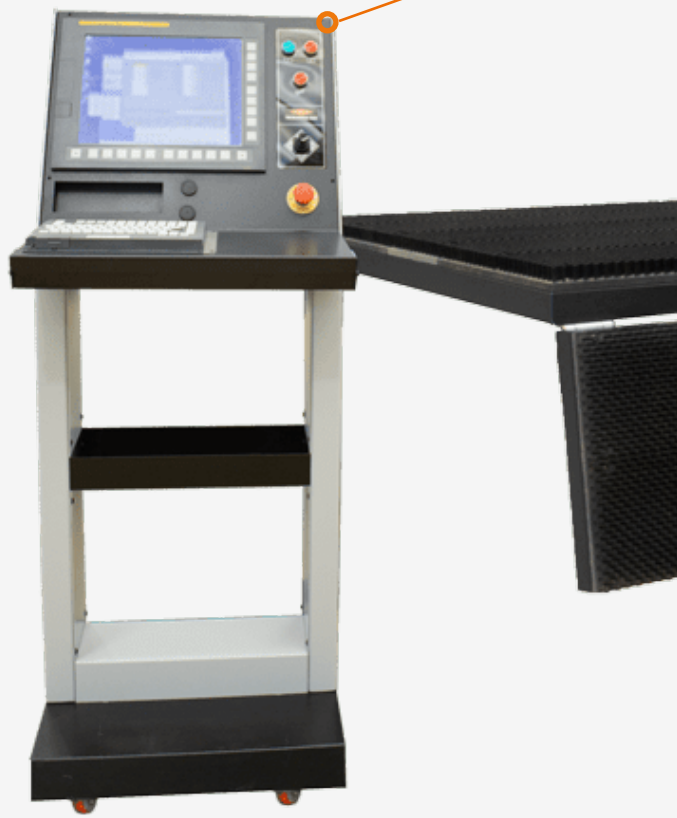

### CHANGE TOOL SYSTEM "FAST CHANGE"

The semi-automatic punching machine with manual tool change system Tecnumerik is equipped with the **Fast Change** system, which allows you to change the tool on the machine in just 12 seconds.

### SERVO DRIVE PUNCHING UNIT

FANUC high-performance servo drive punching unit without any hydraulic oil, ensuring low energy consumption.

# **Standard** Configuration

- "C"-Frame
- 25 Tons of punching force
- Servo drive motor with **DualCam** system
- Manual tool change system with **Fast Change** system
- No. 1 fixed zero reference for sheet metal positioning
- Automatically reclining front table (for an easy access to the machine head)
- N. 2 sheet metal clamping pliers. Even for sheets with already bent edges up to 22 mm
- Sensor for detecting the position of sheet metal clamps with automatic Safety Zone to avoid impacts between clamps and machine head
- Automatic repositioning in X axis by holding the sheet metal through the machine head
- Sheet metal support table with brushes (for thicknesses up to 3 mm)
- FANUC numerical control
- Machine console equipped with 15 inches TOUCH SCREEN monitor
- Software installed in the machine:
  - Customized Human-Machine Interface TECNOCONTROL
  - Graphics software TECNOCAM
- Electric panel on the ground
- Instruction manuals

## What kind of tools can be used?

In the single station available on the Tecnumerik is possible to install a single standard tool or different types of tools to make deformations (e.g. louvers, embossing, marking).

Single tool

Special tool

### Overall dimensions of the machine

| | U.M | 810 | 1000 |
|---|---|---|---|
| Height (A) | mm | 2100 | 2100 |
| Length (B) | mm | 3300 | 3500 |
| Width (C) | mm | 2200 | 3200 |
| Weight | mm | 3.500 | 3.800 |

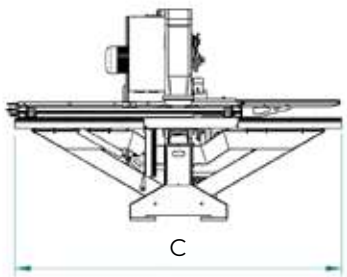


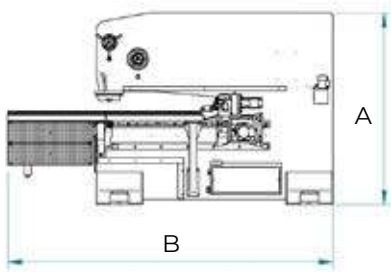

| Technical specifications | | Tecnumerik | |
|---|---|---|---|
| | **U.M** | **810** | **1000** |
| **Working Area** | mm | 810 x 1000 | 1000 x 1500 |
| **Working Area with repositioning** | mm | 810 x 2000 | 1000 x 3000 |
| **Sheet metal format that can be processed (with repositioning and flipping*)** | mm | 1250 x 2000 | 1250 x 2500 |
| Max punching force | Ton | 25 | |
| Max thickness | mm | 6 | |
| Max metal sheet weight | Kg | 150 | |
| Y-axis stroke | mm | -25 /850 | -25 / 1050 |
| X-axis stroke | mm | -40 / 1050 | -40 / 1550 |
| X-axis movement speed | m/min | 65 | |
| Y-axis movement speed | m/min | 50 | |
| Simoultaneus speed | m/min | 80 | |
| Max punching frequency | stroke/min | 600 stroke/min step 1mm \| 310 stroke/min step 25,4mm | |
| Station setup time | sec | 12 | |
| Positioning accuracy | mm | +/- 0,01 | |
| Number of total Axes | n° | 3 | |
| Stand-by motor consumption | Kw | 0,4 | |
| Power consumption during working phase | Kw | 4 | |

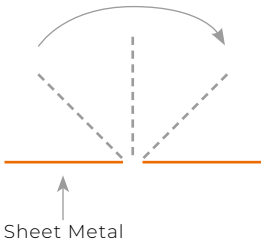


*Flipping

By flipping the sheet metal, it is possible to work sheets that are larger than the Y-axis of the machine.

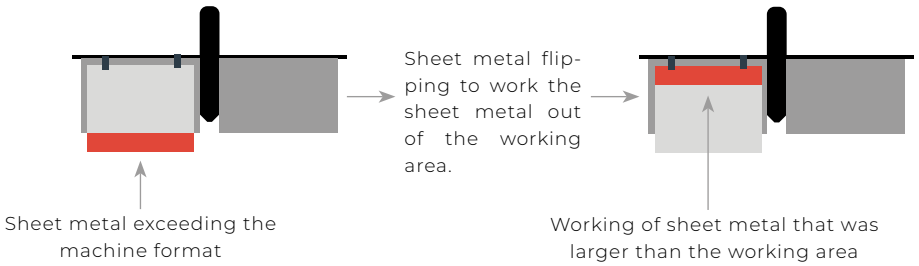

# TecnoPunch
# **Alpha**

The ideal punching machine to enter the world of punching, at an affordable price. It is the evolution of Tecnumerik in fact it has the same CNC functions as an automatic machine. The rotating head allow the orientation of any type of tool, as well as the use of multi-tools, drag tools for cutting, ribs, off-set, and tapping tool.

**Semi-Automatic.** The tool change of the machine is performed manually, while the punching operations can be managed in three modes: manual, semi-automatic and automatic (see page 15).

**25** tons
of punching force

**1**
station

**10***
max. numbers of tools

*Please refer to page 62 for more information on tool types

**CAM SOFTWARE AND 15" TOUCH-SCREEN DISPLAY**

The machine programming is made easy and immediate thanks to the integrated graphic software (TecnoCAM) and 15 inch touch-screen monitor.
TecnoCAM is a software that allows to realize simple shapes in a few steps directly on the machine.

### CHANGE TOOL SYSTEM "FAST CHANGE"

The semi-automatic punching machine with manual tool change system TP Alpha is equipped with the **Fast Change** system, which allows you to change the tool on the machine in just 12 seconds.

### INTEGRATED AUTO-INDEX SYSTEM

It enables to rotate any tool from 0° to 360°.

### SERVO DRIVE PUNCHING UNIT

FANUC high-performance servo drive punching unit without any hydraulic oil, ensuring low energy consumption. It also includes DualCam technology for high frequency machining operations avoiding overheating of the motor.

# **Standard** Configuration

- "C"-Frame
- 25 Tons of punching force
- Servo drive motor with **DualCam** system
- Manual tool change system with **Fast Change** system
- **"Full Auto-Index"**, integrated system to rotate each tool and all the tools stored in the Multi-tool
- No. 1 fixed zero reference for sheet metal positioning
- Automatically reclining front table (for an easy access to the machine head)
- N. 2 sheet metal clamping pliers. Even for sheets with already bent edges up to 22 mm
- Sheet metal support table with brushes (for thicknesses up to 3 mm)
- Sensor for detecting the position of sheet metal clamps with automatic Safety Zone to avoid impacts between clamps and machine head
- FANUC numerical control
- CNC functions to handle special tools (e.g. wheel tools for high speed forming and tapping tool)
- Machine console equipped with 15 inches TOUCH SCREEN monitor
- Consolle macchina separata con PC FANUC monitor 15" TOUCH SCREEN
- Software installed in the machine:
  - Customized Human-Machine Interface TECNOCONTROL
  - Graphics software TECNOCAM
- Electric panel on the ground
- Instruction manuals

## What kind of tools can be used?

In the single station available on the TP Alpha you can install a single standard tool, a Multitool that gives you the option to insert 5 or 10 tools or special tools to make deformations (e.g. Wheel tool, Louvers, Marking, Embossing).
For more information on tool dimensions, please see page 62.

- Single tool
- 5 stations Multi-tool
- 10 stations Multi-tool
- Special tool
- Tapping tool

| **Overall dimensions of the machine** | | **TecnoPunch** | | |
|---|---|---|---|---|
| | **U.M** | **Alpha 246** | **Alpha 256** | **Alpha 266** |
| Height (A) | mm | 2300 | 2300 | 2300 |
| Length (B) | mm | 3650 | 3900 | 4400 |
| Width (C) | mm | 3200 | 3200 | 3200 |
| Weight | mm | 4800 | 4900 | 5500 |

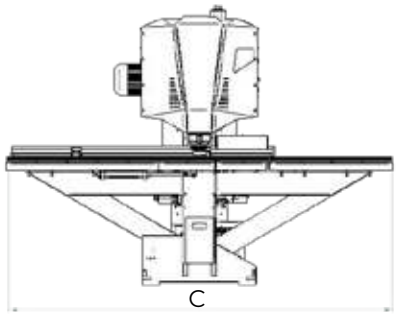


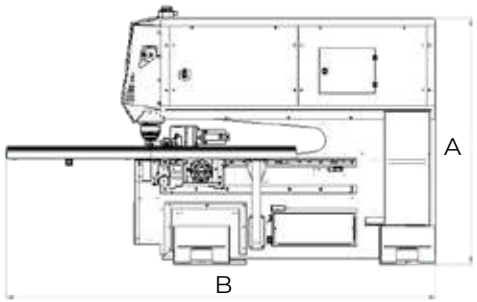

| Technical specifications | | TecnoPunch | | |
|---|---|---|---|---|
| | **U.M** | **Alpha 246** | **Alpha 256** | **Alpha 266** |
| **Working Area** | mm | 1000 x 1500 | 1250 x 1500 | 1500 x 1500 |
| **Working Area with repositioning** | mm | 1000 x 3000 | 1250 x 3000 | 1500 x 3000 |
| Max punching force | Ton | | 25 | |
| Max thickness | mm | | 6 | |
| Max metal sheet weight | Kg | | 150 | |
| Y-axis stroke | mm | -25 / 1050 | -25 / 1270 | -25 / 1550 |
| X-axis stroke | mm | -40 / 1550 | -40 / 1550 | -40 / 1550 |
| X-axis movement speed | m/min | | 70 | |
| Y-axis movement speed | m/min | | 50 | |
| Simoultaneus speed | m/min | | 85 | |
| Max punching frequency | stroke/min | 600 stroke/min step 1mm \| 310 stroke/min step 25,4mm | | |
| Time required for tool change with Multi-tool | sec | | 1,5 | |
| Station setup time (with Fast Change) | sec | | 12 | |
| Positioning accuracy | mm | | +/- 0,01 | |
| C-axis rotation speed | rpm | | 50 | |
| Minimum possible C-axis rotation (auto-index) | ° | | 0,01 | |
| Number of total Axes | n° | | 6 | |
| Stand-by motor consumption | Kw | | 0,4 | |
| Power consumption during working phase | Kw | | 5 | |

# TecnoPunch
# **Beta**

It is suitable for productions such as panelboards, security doors, ventilation systems and so on. It is the perfect trade-off between cutting-edge technology and affordable price. Automatic and compact, versatile and efficient with low energy consumption. Station set-up is carried out in just 12 seconds, while the tool change during program operation in just 3 seconds.

**25** tons
of punching force

**5**
stations

**50***
max. number of tools

*Please refer to page 62 for more information on tool types

**“C”-FRAME**

It enables you to process sheets that are bigger than the machine's working range and to load them both frontally and sideways.
The open "C" frame ensures the operator the highest accessibility and visibility of the working area.

**SMART TURRET**

Cambio utensile automatico a 5 stazioni sviluppato orizzontalmente. Può essere attrezzato in pochi secondi grazie al sistema **Speedy Setup**.

**INTEGRATED AUTO-INDEX SYSTEM**

It enables to rotate any tool from 0° to 360°.

**SERVO DRIVE PUNCHING UNIT**

FANUC high-performance servo drive punching unit without any hydraulic oil, ensuring low energy consumption. It also includes DualCam technology for high frequency machining operations avoiding overheating of the motor.

# **Standard** Configuration

- "C"-Frame
- 25 Tons of punching force
- Servo drive motor with **DualCam** system
- **"Full Auto-Index"**, integrated system to rotate each tool and all the tools stored in the Multi-tool
- Automatic tool change system with 5 stations **"Smart Turret"**
- No. 1 fixed zero reference for sheet metal positioning
- N. 2 sheet metal clamping pliers. Even for sheets with already bent edges up to 22 mm
- Sensor for detecting the position of sheet metal clamps with automatic Safety Zone to avoid impacts between clamps and machine head
- Sensor that detects whether the punch has not been removed from the sheet metal
- Automatic repositioning in X axis by holding the sheet metal through the machine head
- Sheet metal support table with brushes (for thicknesses up to 3 mm)
- FANUC numerical control
- Gestione funzioni CNC per utensili speciali (es. deformazioni ad alta velocità (utensili a rotella) e filettatore)
- Machine console equipped with 15 inches TOUCH SCREEN monitor
- Software installed in the machine:
  - Customized Human-Machine Interface TECNOCONTROL
  - Graphics software TECNOCAM
- Electric panel on the ground
- Instruction manuals

## What kind of tools can be used?

In the 5 stations available on the TP Beta you can install a single standard tool, a Multitool that gives you the option to insert 5 or 10 tools or special tools to make deformations (e.g. Wheel tool, Louvers, Marking, Embossing).
For more information on tool dimensions, please see page 62.

- Single tool
- 5 stations Multi-tool
- 10 stations Multi-tool
- Special tool
- Tapping tool

| **Overall dimensions of the machine** | | **TecnoPunch** | | |
|---|---|---|---|---|
| | **U.M** | **Beta 256** | **Beta 258** | **Beta 266** |
| Height (A) | mm | 2300 | 2300 | 2300 |
| Length (B) | mm | 3900 | 3900 | 4400 |
| Width (C) | mm | 3200 | 4350 | 3200 |
| Weight | mm | 3.500 | 4.500 | 5500 |

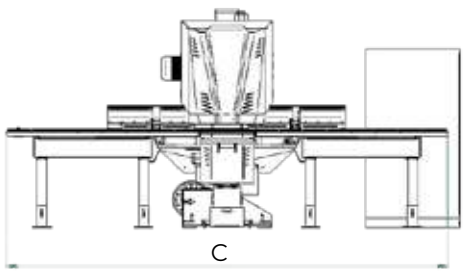


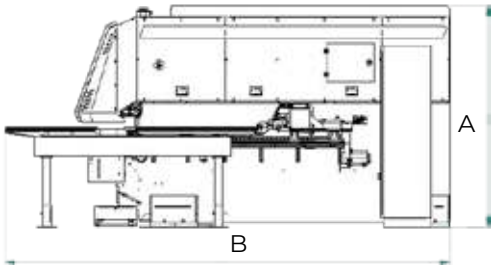

| Technical specifications | | TecnoPunch | | |
|---|---|---|---|---|
| | **U.M** | **Beta 256** | **Beta 258** | **Beta 266** |
| **Working Area** | mm | 1250 x 1500 | 1250 x 2000 | 1500 x 1500 |
| **Working Area with repositioning** | mm | 1250 x 3000 | 1500 x 4000 | 1500 x 3000 |
| Max punching force | Ton | | 25 | |
| Max thickness | mm | | 6 | |
| Max metal sheet weight | Kg | | 150 | |
| Y-axis stroke | mm | -25 / 1270 | -40 / 1270 | -25 / 1550 |
| X-axis stroke | mm | -40 / 1550 | -40 / 2040 | -40 / 1550 |
| X-axis movement speed | m/min | | 75 | |
| Y-axis movement speed | m/min | | 55 | |
| Simoultaneus speed | m/min | | 88 | |
| Max punching frequency | stroke/min | 750 stroke/min step 1mm \| 310 stroke/min step 25,4mm | | |
| Time required for tool change | sec | | 3 | |
| Time required for tool change with Multi-tool | sec | | 1,5 | |
| Station setup time (with Speedy Setup) | sec | | 12 | |
| Positioning accuracy | mm | | +/- 0,01 | |
| C-axis rotation speed | rpm | | 50 | |
| Minimum possible C-axis rotation (auto-index) | ° | | 0,01 | |
| Number of total Axes | n° | | 8 | |
| Stand-by motor consumption | Kw | | 0,4 | |
| Power consumption during working phase | Kw | | 6 | |

# TecnoPunch
# **Gamma**

It is suitable for own productions and third-party account, providing an excellent performance/investment ratio.
The groundbreaking vertical turret, unique feature of TECHNOLOGY, is equipped with 15 rotating stations that allow considerable savings on machine setup times and tools purchase costs

**25** ton
of punching force

**15**
stations

**150***
max. number of tools

*Please refer to page 62 for more information on tool types

**“C”-FRAME**

It enables you to process sheets that are bigger than the machine's working range and to load them both frontally and sideways.
The open "C" frame ensures the operator the highest accessibility and visibility of the working area.

**VERTICAL TURRET**

Groundbreaking 15-stations tool change system, unique on the market thanks to its vertical design. This feature, worldwide patented by TECHNOLOGY, allows to have the smallest possible encumbrance in the working area. It can be set up in few seconds thanks to the Speedy Setup system.

**INTEGRATED AUTO-INDEX SYSTEM**

It enables to rotate any tool from 0° to 360°.

**SERVO DRIVE PUNCHING UNIT**

FANUC high-performance servo drive punching unit without any hydraulic oil, ensuring low energy consumption. It also includes DualCam technology for high frequency machining operations avoiding overheating of the motor.

# **Standard** Configuration

- "C"-Frame
- 25 Tons of punching force
- Servo drive motor with **DualCam** system
- **"Full Auto-Index"**, integrated system to rotate each tool and all the tools stored in the Multi-tool
- **"Vertical Turret"** with 15-stations automatic tool change system
- No. 1 fixed zero reference for sheet metal positioning
- N. 2 sheet metal clamping pliers. Even for sheets with already bent edges up to 22 mm
- Sensor for detecting the position of sheet metal clamps with automatic Safety Zone to avoid impacts between clamps and machine head
- Sensor that detects whether the punch has not been removed from the sheet metal
- Automatic repositioning in X axis by holding the sheet metal through the machine head
- Sheet metal support table with brushes (for thicknesses up to 3 mm)
- FANUC numerical control
- Gestione funzioni CNC per utensili speciali (es. deformazioni ad alta velocità (utensili a rotella) e filettatore)
- Machine console equipped with 15 inches TOUCH SCREEN monitor
- Software installed in the machine:
  - Customized Human-Machine Interface TECNOCONTROL
  - Graphics software TECNOCAM
- Electric panel on the ground
- Instruction manuals

## What kind of tools can be used?

In the 15 stations available on the TP Gamma you can install a single standard tool, a Multitool that gives you the option to insert 5 or 10 tools or special tools to make deformations (e.g. Wheel tool, Louvers, Marking, Embossing).
For more information on tool dimensions, please see page 62.

- Single tool
- 5 stations Multi-tool
- 10 stations Multi-tool
- Special tools
- Tapping tool

**Overall dimensions of the machine** — **TecnoPunch**

| | U.M | Gamma 256 | Gamma 258 | Gamma 2510 | Gamma 266 | Gamma 268 |
|---|---|---|---|---|---|---|
| Height (A) | mm | 2430 | 2430 | 2430 | 2430 | 2430 |
| Length (B) | mm | 3900 | 3900 | 3900 | 4400 | 4400 |
| Width (C) | mm | 3200 | 4350 | 5350 | 3200 | 4350 |
| Weight | mm | 6000 | 6.200 | 6400 | 7700 | 8000 |

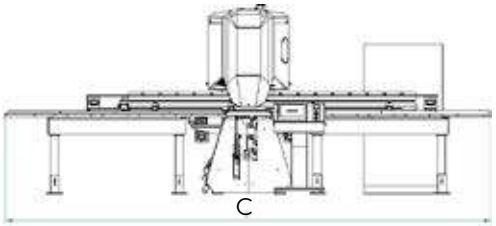


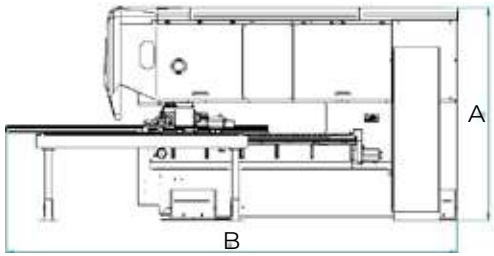

**Technical specifications** **TecnoPunch**

| | U.M | Gamma 256 | Gamma 258 | Gamma 2510 | Gamma 266 | Gamma 268 |
|---|---|---|---|---|---|---|
| **Working Area** | mm | 1250 x 1500 | 1250 x 2000 | 1250 x 2500 | 1500 x 1500 | 1500 x 2000 |
| **Working Area with repositioning** | mm | 1250 x 3000 | 1250 x 4000 | 1250 x 5000 | 1500 x 3000 | 1500 x 4000 |
| Max punching force | Ton | 25 | | | | |
| Max thickness | mm | 6 | | | | |
| Max metal sheet weight | Kg | 150 | | | | |
| Y-axis stroke | mm | -25 / 1270 | -40 / 1270 | -40 / 1270 | -25 / 1550 | -40 / 1550 |
| X-axis stroke | mm | -40 / 1550 | -40 / 2040 | -40 / 2540 | -40 / 1550 | -40 / 2040 |
| X-axis movement speed | m/min | 75 | | | | |
| Y-axis movement speed | m/min | 55 | | | | |
| Simoultaneus speed | m/min | 88 | | | | |
| Max punching frequency | stroke/min | 750 stroke/min step 1mm \| 310 stroke/min step 25,4mm | | | | |
| Time required for tool change | sec | 3 | | | | |
| Time required for tool change with Multi-tool | sec | 0,5 | | | | |
| Station setup time (with Speedy Setup) | sec | 12 | | | | |
| Positioning accuracy | mm | +/- 0,01 | | | | |
| C-axis rotation speed | rpm | 50 | | | | |
| Minimum possible C-axis rotation (auto-index) | ° | 0,01 | | | | |
| Number of total Axes | n° | 9 | | | | |
| Stand-by motor consumption | Kw | 0,4 | | | | |
| Power consumption during working phase | Kw | 6 | | | | |

# **Start Line**
# Optional

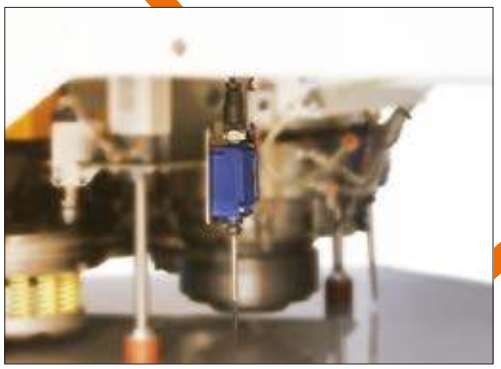

**Sensor that detects whether the punch has not been removed from the sheet metal**
It protects the punching machine from damages and minimizes sheet metal waste. (It also reduces the risk of damaging the worpieces)

**Scrap suction system from the die**

It prevents the waste from reaching the working area. Recommended for high-frequency punching operations on thin thicknesses (e.g. grid).

**5-station tool cart**

Having the tools at hand makes tool change operations easier and faster.

**Webcam for remote assistance connected to the console**

It considerably improves the communication between the company and the customer

## Models of punching machines on which the optional accessories are available

Tecnumerik
TP Alpha

Tecnumerik
TP Alpha
TP Beta
TP Gamma

Tecnumerik
TP Alpha

Tecnumerik
TP Alpha
TP Beta
TP Gamma

**Antenna for machine connection to WI-FI network**

Internet wireless connection of the punching machine

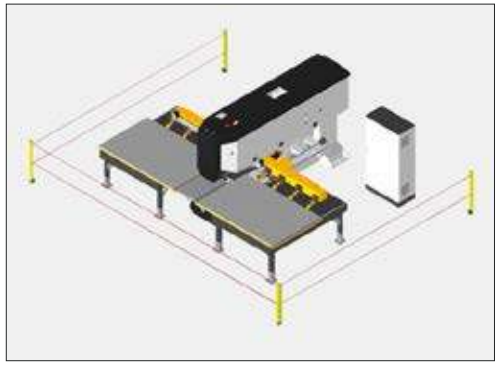

**Safety photocells in compliance with CE standards**

They are necessary to create a safety zone around the machine during machining operations

**Tele Assistance + Industry 4.0**

Tele Assistance guarantees remote machine service thanks to our staff and Industry 4.0 systems meet the needs of automation and increased productivity.

## Models of punching machines on which the optional accessories are available

Tecnumerik
TP Alpha
TP Beta
TP Gamma

Tecnumerik
TP Alpha
TP Beta
TP Gamma

Tecnumerik
TP Alpha
TP Beta
TP Gamma

# Advanced Line

The Advanced Line consists of Premium punching machines that make Performance their forte.

## TP Zeta

**Typology** Automatica

**Productivity** ★ ★ ★ ★ ★

## TP Zeta XL

**Typology** Automatica

**Productivity** ★ ★ ★ ★ ★

# Uncompromising **Productivity**

# Advanced Line
## Speed. Power. High performance.

**The punch machines of the Advanced line are the ultimate expression of advanced technology; a perfect combination of power and speed for top level performances.**

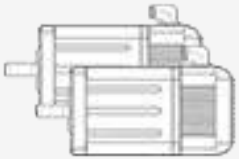

### More Speed

The Advanced Line punching machines are all equipped with a dual Y-axis motor to ensure maximum stability and accuracy at incredible punching speeds.

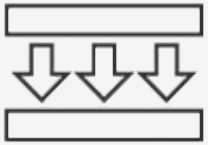

### More Power

The punching force of 30 Tons allows you to generate more power to facilitate the machining of thicker sheet metal.

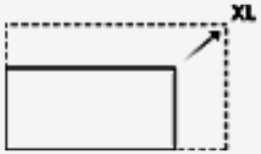


### Higher Productivity

Exploiting working areas of up to 1500 x 4000 (mm) it is possible to work the whole metal sheet without repositioning, shortening production times.

# TecnoPunch
# **Zeta**

Ideal for large-scale production for companies seeking a high level of technology and performance.
One of a kind in terms of accessibility and versatility. The reduced dimensions of the vertical turret in the working area allows the machining of corrugated sheets or sheets with thicknesses up to 4/6mm. It can be equipped with an automatic loading and unloading system for sheet metal, allowing a nonstop production.

**30** ton
of punching force

**15**
stations

**150***
max. number of tools

*Please refer to page 62 for more information on tool types

**“C”-FRAME**

It enables you to process sheets that are bigger than the machine's working range and to load them both frontally and sideways. The open "C" frame ensures the operator the highest accessibility and visibility of the working area.

### VERTICAL TURRET

Groundbreaking 15-stations tool change system, unique on the market thanks to its vertical design. This feature, worldwide patented by TECHNOLOGY, allows to have the smallest possible encumbrance in the working area. It can be set up in few seconds thanks to the Speedy Setup system.

### INTEGRATED AUTO-INDEX SYSTEM

It enables to rotate any tool from 0° to 360°.

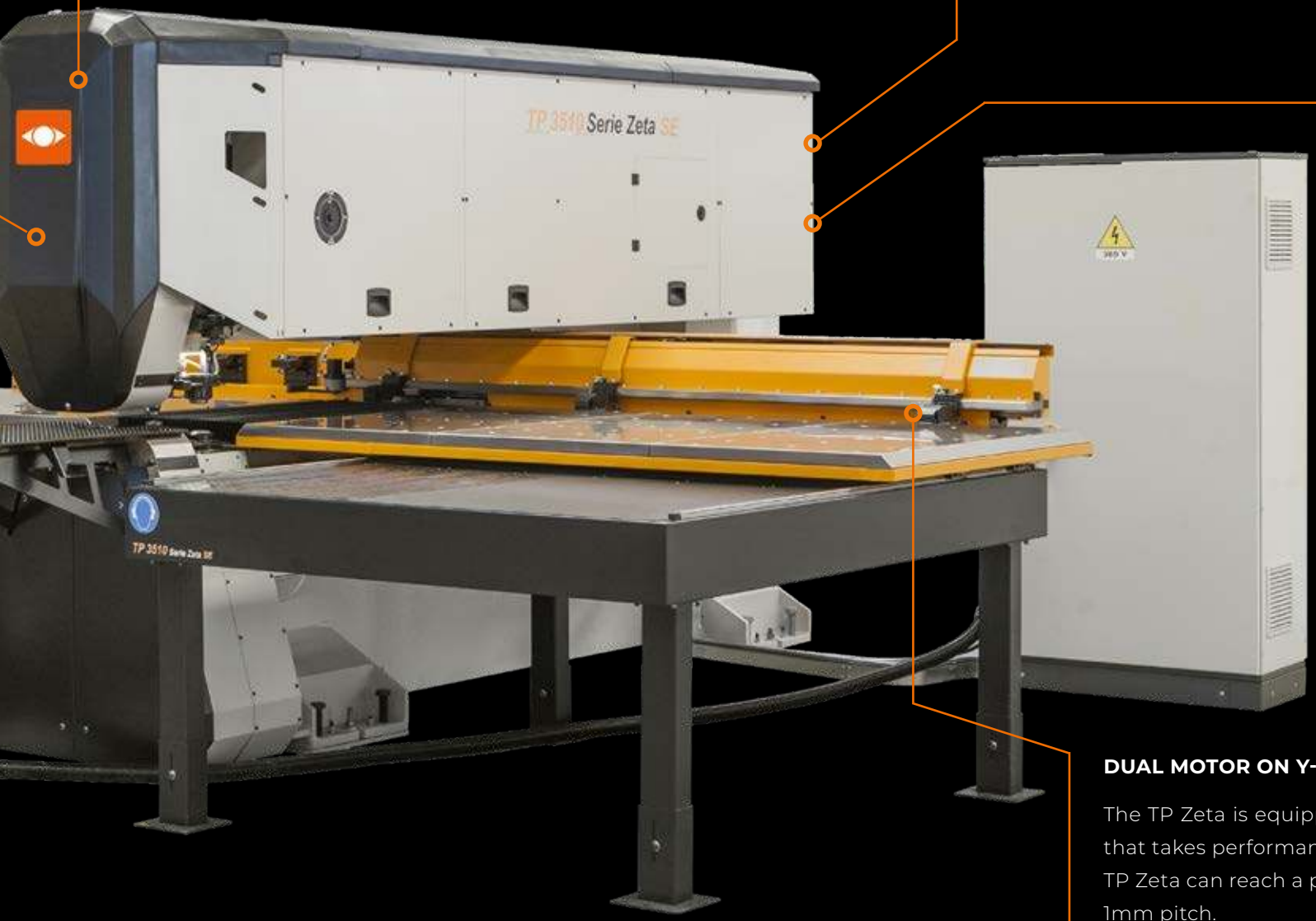


### SERVO DRIVE PUNCHING UNIT

FANUC high-performance servo drive punching unit without any hydraulic oil, ensuring low energy consumption. It also includes DualCam technology for high frequency machining operations avoiding overheating of the motor.

### DUAL MOTOR ON Y-AXIS

The TP Zeta is equipped with a dual motor for Y-axis movement that takes performances to the next level.
TP Zeta can reach a punching frequency of 900 strokes/min with 1mm pitch.

# **Standard** Configuration

- "C"-Frame
- 30 Tons of punching force
- Servo drive motor with **DualCam** system
- **"Full Auto-Index"**, integrated system to rotate each tool and all the tools stored in the Multi-tool
- **"Vertical Turret"** with 15-stations automatic tool change system
- No. 2 fixed zero reference for sheet metal positioning
- N. 3 sheet metal clamping pliers. Even for sheets with already bent edges up to 22 mm
- Dual motor for Y-axis movement
- Sensor for detecting the position of sheet metal clamps with automatic **Safety Zone** to avoid impacts between clamps and machine head
- Scrap suction system from the die (It prevents the waste from reaching the working area)
- Sheet metal support table with both brushes and metal balls (for thicknesses up to 3 mm)
- Sensor that detects whether the punch has not been removed from the sheet metal
- Nebulizer with oil to lubricate the working area where the punch works on the sheet metal.
- Automatic repositioning in X axis by holding the sheet metal through the machine head
- Lateral START/STOP button with pedal for opening/closing the clamps.
  (It supports the loading of sheets smaller than 1000x1000 mm)
- FANUC numerical control
- CNC functions to handle special tools (e.g. wheel tools for high speed forming and tapping tool)
- Machine console with FANUC PC and 15 inch TOUCH SCREEN monitor
- Software installed in the machine:
  - Customized Human-Machine Interface TECNOCONTROL
- Electric panel on the ground
- Tele Assistance
- Instruction manuals

## What kind of tools can be used?

In the 15 stations available on the TP Zeta you can install a single standard tool, a Multitool that gives you the option to insert 5 or 10 tools or special tools to make deformations (e.g. Wheel tool, Louvers, Marking, Embossing).
For more information on tool dimensions, please see page 62.

- Single tool
- 5 stations Multi-tool
- 10 stations Multi-tool
- Special tools
- Tapping tool

## Overall dimensions of the machine

### TecnoPunch

| | U.M | Zeta 3510 | Zeta 3610 | Zeta 3612 |
|---|---|---|---|---|
| Height (A) | mm | 2360 | 2360 | 2360 |
| Length (B) | mm | 4700 | 4950 | 4950 |
| Width (C) | mm | 5380 | 5380 | 6200 |
| Weight | mm | 11.500 | 13.800 | 14.000 |

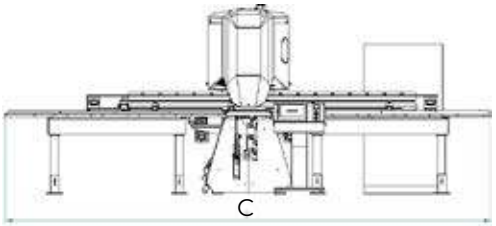


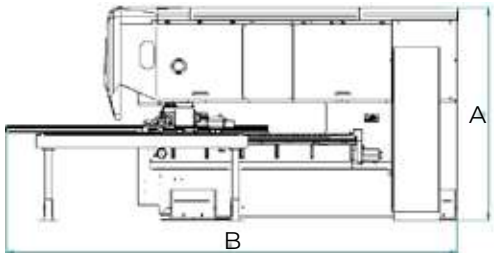

## Technical specifications

| | | TecnoPunch | | |
|---|---|---|---|---|
| | **U.M** | **Zeta 3510** | **Zeta 3610** | **Zeta 3612** |
| **Working Area** | mm | 1250 x 2500 | 1500 x 2500 | 1500 x 3000 |
| **Working Area with repositioning** | mm | 1250 x 5000 | 1500 x 5000 | 1500 x 6000 |
| Max punching force | Ton | | 30 | |
| Max thickness | mm | | 6 | |
| Max metal sheet weight | Kg | | 150 | |
| Y-axis stroke | mm | -40 /+1340 | -40 /+1590 | -40 /+1590 |
| X-axis stroke | mm | -40 /+2540 | -40 /+2540 | -40 /+3040 |
| X-axis movement speed | m/min | | 90 | |
| Y-axis movement speed | m/min | | 80 | |
| Simoultaneus speed | m/min | | 110 | |
| Max punching frequency | stroke/min | 900 stroke/min step 1mm \| 380 stroke/min step 25,4mm | | |
| Time required for tool change | sec | | 3 | |
| Time required for tool change with Multi-tool | sec | | 0,5 | |
| Station setup time | sec | | 12 | |
| Positioning accuracy | mm | | +/- 0,01 | |
| C-axis rotation speed | rpm | | 60 | |
| Minimum possible C-axis rotation (auto-index) | ° | | 0,01 | |
| Number of total Axes | n° | | 9 | |
| Stand-by motor consumption | Kw | | 0,4 | |
| Power consumption during working phase | Kw | | 8 | |

# TecnoPunch
# **Zeta XL**

One of the key features of TECHNOLOGY Italiana is the huge working area, which allow the processing of over-size sheet metal by repositioning, and enable to achieve incomparable results. It shares with TP Zeta all the advantages of the vertical turret: highest accessibility and versatility, as well as all the innovative technology of TECNOPUNCH machines.

**30** ton
of punching force

**15**
stations

**150***
max. number of tools

*Please refer to page 62 for more information on tool types

**SERVO DRIVE PUNCHING UNIT**

FANUC high-performance servo drive punching unit without any hydraulic oil, ensuring low energy consumption. It also includes DualCam technology for high frequency machining operations avoiding overheating of the motor.

**VERTICAL TURRET**

Groundbreaking 15-stations tool change system, unique on the market thanks to its vertical design. This feature, worldwide patented by TECHNOLOGY, allows to have the smallest possible encumbrance in the working area. It can be set up in few seconds thanks to the Speedy Setup system.

**INTEGRATED AUTO-INDEX SYSTEM**

It enables to rotate any tool from 0° to 360°.

**DUAL MOTOR ON Y-AXIS**

The TP Zeta XL is equipped with a dual motor for Y-axis movement that takes performances to the next level.
TP Zeta can reach a punching frequency of 500 strokes/min with 1mm pitch.

**EXTRA LARGE WORKING RANGE**

The only punching machine to have a working range of 1500 x 4000, which allows to process high dimensions sheets without the need of repositioning.

# **Standard** Configuration

- "C"-Frame
- 30 Tons of punching force
- Servo drive motor with **DualCam** system
- **"Full Auto-Index"**, integrated system to rotate each tool and all the tools stored in the Multi-tool
- **"Vertical Turret"** with 15-stations automatic tool change system
- No. 2 fixed zero reference for sheet metal positioning
- N. 4 sheet metal clamping pliers. Even for sheets with already bent edges up to 22 mm
- Dual motor for Y-axis movement
- Sensor for detecting the position of sheet metal clamps with automatic **Safety Zone** to avoid impacts between clamps and machine head
- Scrap suction system from the die (It prevents the waste from reaching the working area)
- Sheet metal support table with both brushes and metal balls (for thicknesses up to 3 mm)
- Sensor that detects whether the punch has not been removed from the sheet metal
- Nebulizer with oil to lubricate the working area where the punch works on the sheet metal.
- Automatic repositioning in X axis by holding the sheet metal through the machine head
- Lateral START/STOP button with pedal for opening/closing the clamps.
  (It supports the loading of sheets smaller than 1000x1000 mm)
- FANUC numerical control
- CNC functions to handle special tools (e.g. wheel tools for high speed forming and tapping tool)
- Machine console with FANUC PC and 15 inch TOUCH SCREEN monitor
- Software installed in the machine:
  - Customized Human-Machine Interface TECNOCONTROL
- Electric panel on the ground
- Tele Assistance
- Instruction manuals

## What kind of tools can be used?

In the 15 stations available on the TP Zeta XL you can install a single standard tool, a Multitool that gives you the option to insert 5 or 10 tools or special tools to make deformations (e.g. Wheel tool, Louvers, Marking, Embossing).
For more information on tool dimensions, please see page 62.

- Single tool
- 5 stations Multi-tool
- 10 stations Multi-tool
- Special tools
- Tapping tool

| **Overall dimensions of the machine** | | **TecnoPunch** |
|---|---|---|
| | **U.M** | **Zeta XL 3616** |
| Height (A) | mm | 10950 |
| Length (B) | mm | 4950 |
| Width (C) | mm | 2360 |
| Weight | mm | 15000 |

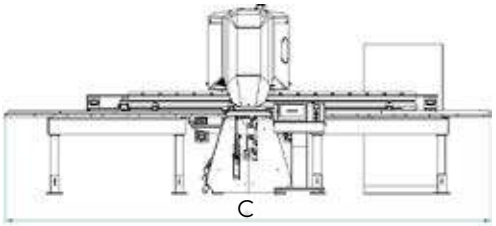


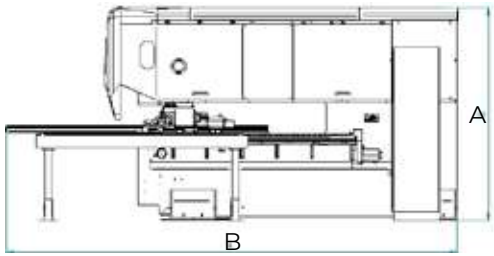

| Technical specifications | | TecnoPunch |
|---|---|---|
| | **U.M** | **Zeta XL 3616** |
| **Working Area** | mm | 1500 x 4000 |
| **Working Area with repositioning** | mm | 1500 x 8000 |
| Max punching force | Ton | 30 |
| Max thickness | mm | 6 |
| Max metal sheet weight | Kg | 150 |
| Y-axis stroke | mm | -40 /+1590 |
| X-axis stroke | mm | -40 /+4100 |
| X-axis movement speed | m/min | 70 |
| Y-axis movement speed | m/min | 55 |
| Simoultaneus speed | m/min | 89 |
| Max punching frequency | stroke/min | 500 stroke/min step 1mm \| 380 stroke/min step 25,4mm |
| Time required for tool change | sec | 3 |
| Time required for tool change with Multi-tool | sec | 0,5 |
| Station setup time | sec | 12 |
| Positioning accuracy | mm | +/- 0,01 |
| C-axis rotation speed | rpm | 60 |
| Minimum possible C-axis rotation (auto-index) | ° | 0,01 |
| Number of total Axes | n° | 9 |
| Stand-by motor consumption | Kw | 0,4 |
| Power consumption during working phase | Kw | 8 |

# Advanced Line
## Optional

**Steel sheet metal support tables with metal balls**

Recommended for working sheets with thickness over 3mm

**Automatic and programmable sheet metal locking clamps**

It automates the machine setup, recommended if you often changes sheet metal format

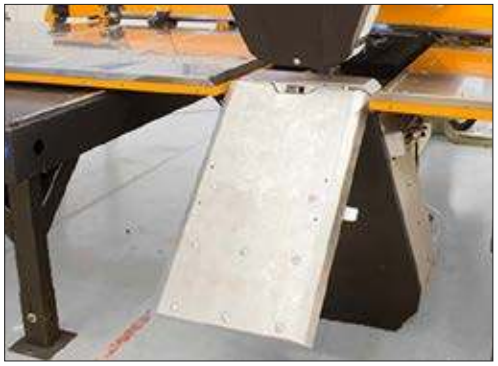

**Frontal reclining table for unloading the workpieces**

Ideal for partitioning
(Min format: 150mm x 150mm
max: 500mm x 500mm)

**Conveyor belt for waste disposal**

It avoids machine downtimes caused by the waste container being emptied

Models of punching machines on which the optional accessories are available

| | | | |
|---|---|---|---|
| TP Zeta | TP Zeta | TP Zeta | TP Zeta |
| TP Zeta XL | TP Zeta XL | TP Zeta XL | TP Zeta XL |

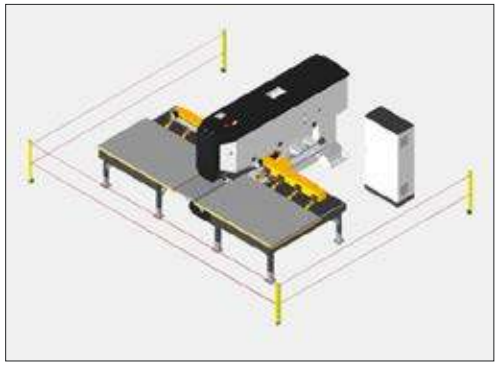

**Safety photocells in compliance with CE standards**

They are necessary to create a safety zone around the machine during machining operations

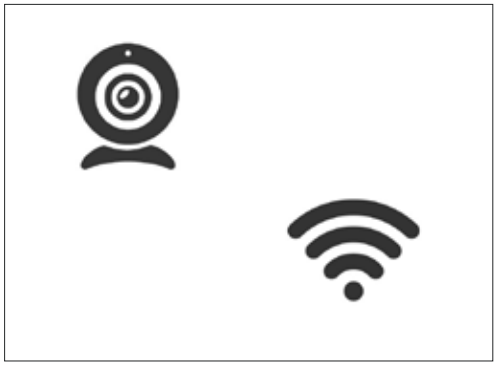

**Webcam for remote assistance and antenna for machine connection to WI-FI network**
Internet wireless connection of the punching machine. It considerably improves the communication between the company and the customer

**Barcode reader for uploading programs into the machine**

It facilitates the loading of the programs on the machine avoiding errors

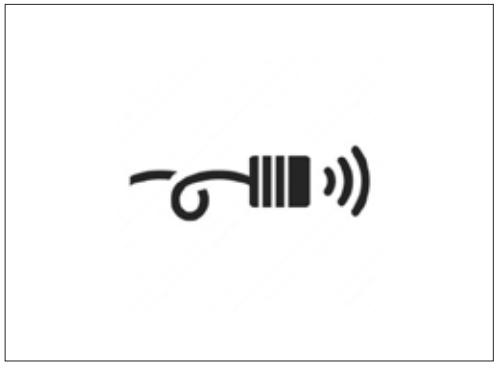

**Ready to be supported by automatic sheet metal loading and unloading systems**
The punching machines of the Advanced line are perfect to be combined with a sheet metal loading and unloading system.

## Models of punching machines on which the optional accessories are available

TP Zeta
TP Zeta XL

TP Zeta
TP Zeta XL

TP Zeta
TP Zeta XL

TP Zeta
TP Zeta XL

# Automate the **sheet metal working** process

TECHNOLOGY offers various solutions to automate the punching machine production cycle: ranging from the simple sheet metal loading and unloading to the sorting of pieces (stacking workpieces on a pallet).

## **Why** choose automation?

- **Unattended work cycles**
  It is possible to set work cycles even during night time, without the need of any operator.
- **Automatic sheet metal loading/unloading**
  Handling of large and heavy sheets metal without operator supervision.
- **Production time never changes from one time to another**
  The work cycles will always have the same duration.
- **Maximum safety at work**
  The fully automated production cycle prevents operators from suffering injuries.

Plus
TCP Plus 616

# Our **automation** system

**1. Automatic sheet metal loading and unloading**
It allows automatizing the loading and unloading cycle of manufactured or micro-jointed sheets, without programming.

- Automatic sheet metal loading and unloading
- Compact system

---

**2. Automatic sheet metal loading/unloading + Sorting**
It allows to stack the finished workpieces on pallets (sorting) by programming the operations in a simple and intuitive way using the JetCam Cad/Cam software. Thanks to this feature, processing sheets with micro-junctions is avoided.

Besides, you can carry out normal sheet metal loading and unloading operations without the need for programming.

- Automatic sheet metal loading and unloading
- Stacking workpieces on pallets (sorting)
- Compact system

# Customer **Experience**

**There is only one way to enhance our mission: to give voice to our customers who are enthusiastic about their business experience with TECHNOLOGY.**

*TP ALPHA allows considerable flexibility in standard production and development of new products, as well as speeding up the production of modified products according to customer specific requirements and demands.*

**Stanislav Jurcik**
Owner, HELIO, SPOL . S R.O.
(CZECH REPUBLIC)

*Given the need to automate the production with a numerical control machine, among the various options I examined the best was Technology Italiana: quality and first class technology at the proper price.*

**Claudio Mus**
Owner, OSCAM (ITALY)

*Our current Technology punching machine is a true "working horse" that has never ceased to operate for seven years and allows to produce quality pieces with really low maintenance cost. When it will be necessary to replace the current machine or increase the production line, surely our next machine will be another Technology.*

**Predrag Marin**
*Owner, MARINEXPERT D.O.O. (CROATIA)*

*The strength, speed and precision of the machine combined with the soundness of Technology Italiana were the reasons that convinced us to choose them as our machinery suppliers.*
*We must also mention their unbeatable after-sales service that makes us even more convinced that we made the right choice.*

**Rudyard Cattan**
Owner, INDUSTRIAS CATTAN
(PANAMA)

# **Where** TECHNOLOGY Punching Machines are installed

1300

Installed Punching Machines

| | | | | |
|---|---|---|---|---|
| Algeria | Ecuador | Israel | Poland | Tunisia |
| Saudi Arabia | Estonia | Italy | Portugal | U.S.A |
| Austria | France | Lebanon | Czech Republic | Ukraine |
| Belgium | Germany | Libya | Romania | Hungary |
| Belarus | Greece | Macedonia | Russia | Venezuela |
| Bolivia | India | Mali | Slovakia | |
| Bosnia Herzegovina | England | Morocco | Slovenia | |
| China | Iran | Mexico | Spain | |
| Colombia | Iraq | Pakistan | South Africa | |
| Croatia | Island | Panama | Switzerland | |

# Tool **Holders**

Thanks to the tool holder system, inserting a tool on the machine becomes a simple and user-friendly operation. Since its creation, TECHNOLOGY has been using this type of system with the aim of rendering the use of punching machines more immediate and at the same time as customizable as possible.
In fact, the tool holders can be inserted in any station of our punching machines, without any constraint of size or type of tool.

In order to guarantee the highest possible availability of tools, TECHNOLOGY has chosen to set up its machines with Trumpf style tools, creating a new series of tool holders in partnership with Wilson Tool that allow the operator to use all Trumpf tools.

1 2 3 4

**1. Standard tool holders**
For housing standard tools with Ø 1.5 mm to
Ø 76.2 mm

**1. Special tool holders**
Holder for housing special tools, e.g. wheel tools, and forming tools.

**3. Tool holders for tapping tool**
Holder for tapping tool M2.5 to M10

**4. Tool holders for Multi-tool**
For the housing of:

- **5** stations Multi-tool (da Ø 1,5 a Ø da 16)
- **10** stations Multi-tool (da Ø 1,5 a Ø da 10,5)

TECHNOLOGY punching machines keep full compatibility with TECHNOLOGY-style toolholders.

# **Setting** up a TECHNOLOGY punching machine is extremely simple

The tool holders consist of two elements:

- **Punch holder**:
  used to hold the punch and stripper.
- **Die holder:**
  used to contain the die.

Once the tool has been inserted inside the holder, it only takes a few seconds to place the tool holder on the machine, thanks to the **Speedy Setup** system..

# **Multi-tool.** An immediate way to increase the number of tools

Multi-tool technology allows more tools (5 or 10) to be used in a single station and shortens tool change time to 0.5 seconds.

The tools contained in the Multi-tool can also use auto-index technology to rotate them from 0° to 360°.

# CAD/CAM
Software

**Import**

**DXF DWG**

We have chosen the CAD/CAM programming software JetCam Expert for our
machines because it has been created and designed specifically for punching machines.
It is a stable, intuitive and fast software able to offer advanced functions to program the punching machines and speed up production processes.
Its user-friendly interface is fully customizable,
and allows you to perform more advanced programming in simple ways.
JETCAM Expert is available in three versions with a series of additional units that give you the chance to create customized configurations.

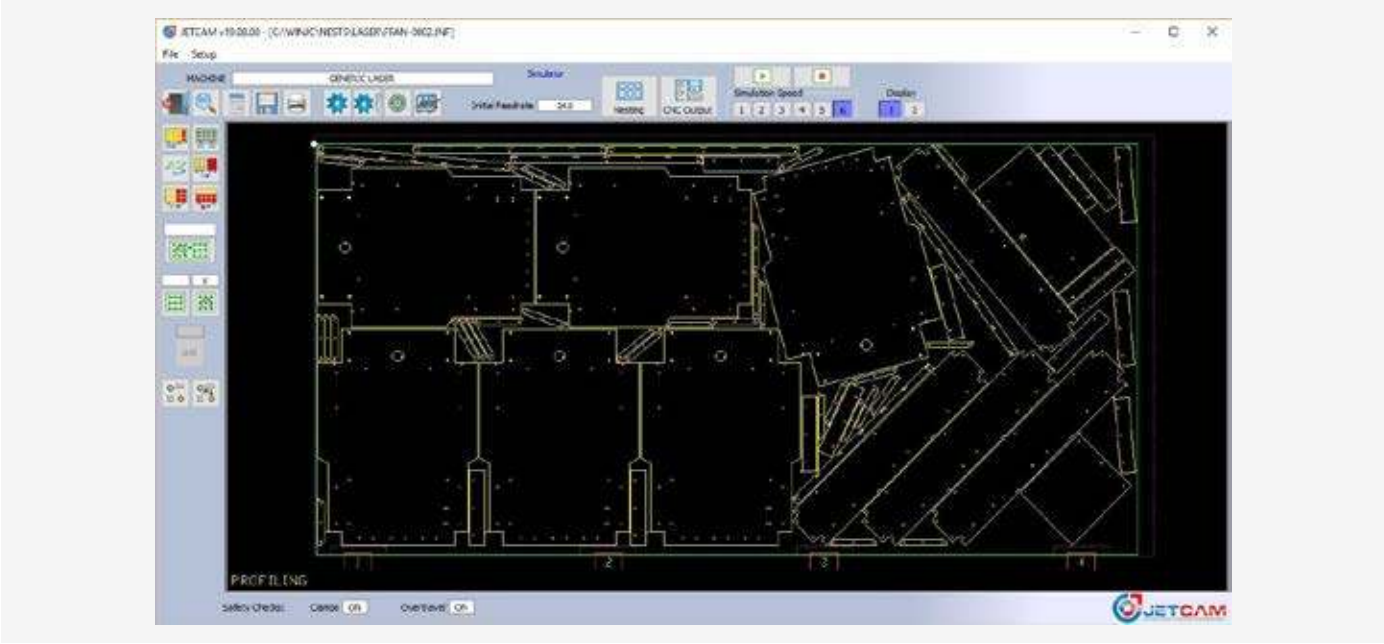


## Some features of the JetCam software

- DXF file viewer
- Integrated CAD for editing and exporting files
- CAD for importing drawings in .DXF format
- and .DWG
- Automatic nesting
- Automatic selection of the best tools for
- perform the processing
- Tool library management
- Possibility of interface with company management software -Enterprise Resource Planning (ERP)
- Management of complex machines (punching machines + automatic loading and unloading systems)

## Choose how you want to program your punching machine.

After a long collaboration of more than 20 years, TECHNOLOGY recommends using JetCam software to get the best out of your punching machines.

TECHNOLOGY punching machines, however, can also be programmed with the most popular CAD/CAM software like:

- Radan
- Metalix
- Lantek

# Create programs.
# Transfer them to the machine.
# **Everything in a few simple steps.**

With the JetCam CAD/CAM software you can realize the programs for the punch press in a few steps directly from your computer.
After completing the programming you will have to perform one last step, which consists in transferring the data to the machine.This last step can be completed in a simple way using the wired network (LAN) or with a simple USB key to be inserted in one of the ports of the console.

**Step 1**
Importing DXF or DWG files.

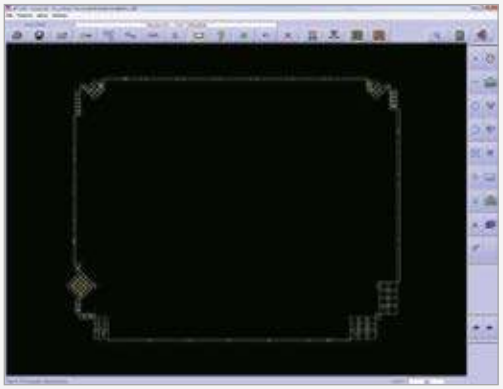

**Step 2**
The software selects the most suitable tools from the libraries for performing the machining.

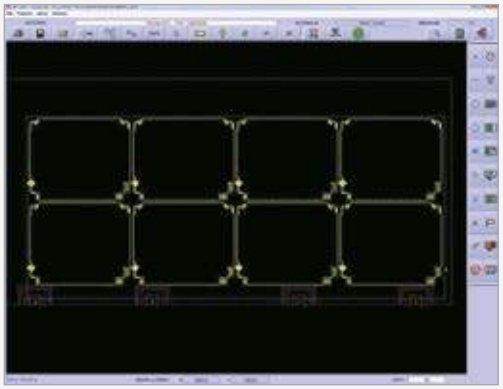

**Step 3**
The nesting is generated and then the CNC code to load into the machine is created.

# A **global service** for punching

Choosing **The punching specialists** means relying on a single partner able to offer global and exclusive services for punching.

**Specialized technicians always by your side**

Our specialized technicians intervene in all the countries where we have installed TECHNOLOGY punching machines

**We solve 75% of all downtime by remote assistance**

With a simple Internet connection we can make a complete error diagnosis, reducing periods of downtime.

**TECHNOLOGY FIRST service program**

If you subscribe to the TECHNOLOGY First program you will have access to many advantages and discounts on all services. It is reserved to each customer possessing a TECHNOLOGY punching machine.

**Other Services**

- Retrofit of your TECHNOLOGY CNC Punching Machine
- Scheduled maintenance
- Original spare parts
- Online portal to sell your CNC punching machine

# **Punching**
# tools

TECHNOLOGY and TRUMPF-style tools make it possible to carry out several sheet metal working operations.
We offer a wide range of tools that can be purchased directly from our online shop.
Specialized consultants are at your disposal to help you choose the most suitable tool and to support you in the creation of special tools (e.g. Logos).

## The **first online shop** where you can buy punching tools and spare parts

Buy tools for your CNC punching machine online at our TECHNOLOGY Shop.

- Buy when you want 24 hours a day
- Prices displayed online without registration
- Free shipping

**shop.technologyitaliana.com**

September 2020

# The CNC Punching Machine Specialists

TECHNOLOGY Italiana
Via Villa Ragone, 18/A - 16039 Sestri Levante - Genova - Italy
Tel. +39.0185.457115 - Fax +39.0185.41256

Follow us:

**www.technologyitaliana.com**